PROFESSIONAL Vision
ILLUMINATED POCKET MAGNIFIER

Designed to be entirely portable, the LED Illuminated Pocket Magnifier is available in two versions, the basic tungsten version, which can be found in the popular range and the superior LED model.

Both versions have five lens combinations ranging from eight to forty dioptres.

The aspheric lenses are optimised for minimum distortion and maximum clarity. The magnifier is powered by two standard AA size batteries.

The LED version offers extended battery life and substantially longer bulb life. The magnifier is supplied in a protective draw string pouch.

LED Illumination

Part No.	Dioptres / Mag.*	Lens Diameter (mm)	Image Vergence	Effective Focal Length (mm)	Field of View on Page (mm)
7270	8.0D / 3x	48.0	-4.0D	12.45	80.0
7146	16.0D / 5x	48.0	-4.0D	62.95	50.0
7147	24.0D / 7x	48.0	-4.0D	41.95	35.0
7148	32.0D / 9x	48.0	-4.0D	31.46	24.0
7271 (with white styling)	40.0D / 11x	40.0	-4.0D	25.08	20.0

Batteries not included * Magnifier conforms to BS EN ISO 15253: 2000 except that trade magnification is quoted instead of nominal magnification and is calculated using (1+ Equivalent Power/4)

COIL

POPULAR Vision
ILLUMINATED POCKET MAGNIFIER

- **Portable size**
- **Stylish, lightweight design**
- **Pre-focus tungsten bulb**
- **Powered by two AA size batteries (not supplied)**
- **Aspheric lens**
- **Range of five magnification options**
- **Protective pouch**
- **Easy battery replacement**

Ideas for use

- Carry in the pocket or handbag for general use
- Store in the car glovebox for map reading
- Keep by the phone for directory reading

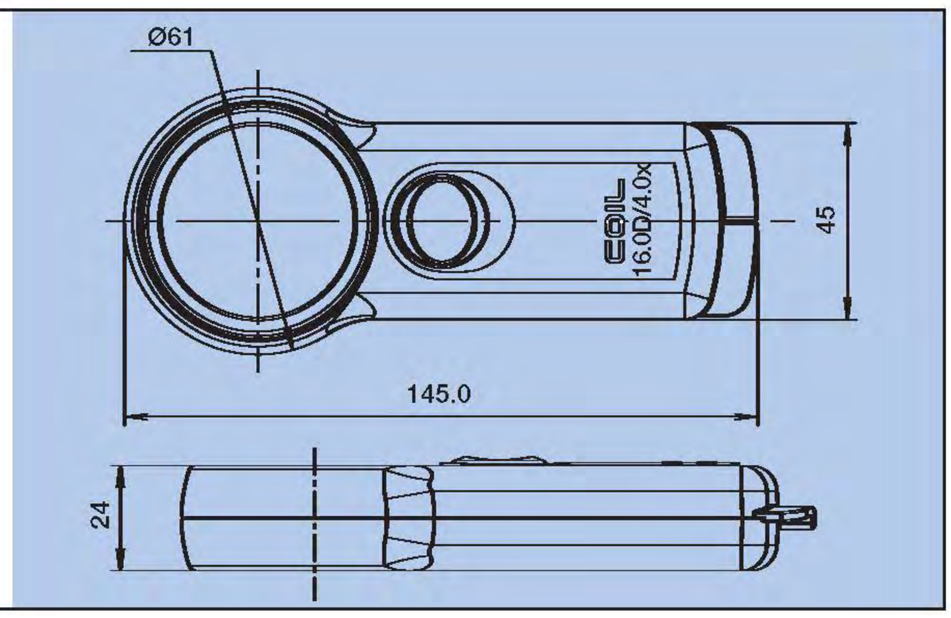

Tungsten Bulb Illumination

Part No.	Dioptres / Mag.*	Lens Diameter (mm)	Image Vergence	Effective Focal Length (mm)	Field of View on Page (mm)
5270	8.0D / 3x	48.0	-4.0D	12.45	80.0
5146	16.0D / 5x	48.0	-4.0D	62.95	50.0
5147	24.0D / 7x	48.0	-4.0D	41.95	35.0
5148	32.0D / 9x	48.0	-4.0D	31.46	24.0
5271 (with white styling)	40.0D / 11x	40.0	-4.0D	25.08	20.0

Batteries not included * Magnifier conforms to BS EN ISO 15253: 2000 except that trade magnification is quoted instead of nominal magnification and is calculated using (1+ Equivalent Power/4)

COIL